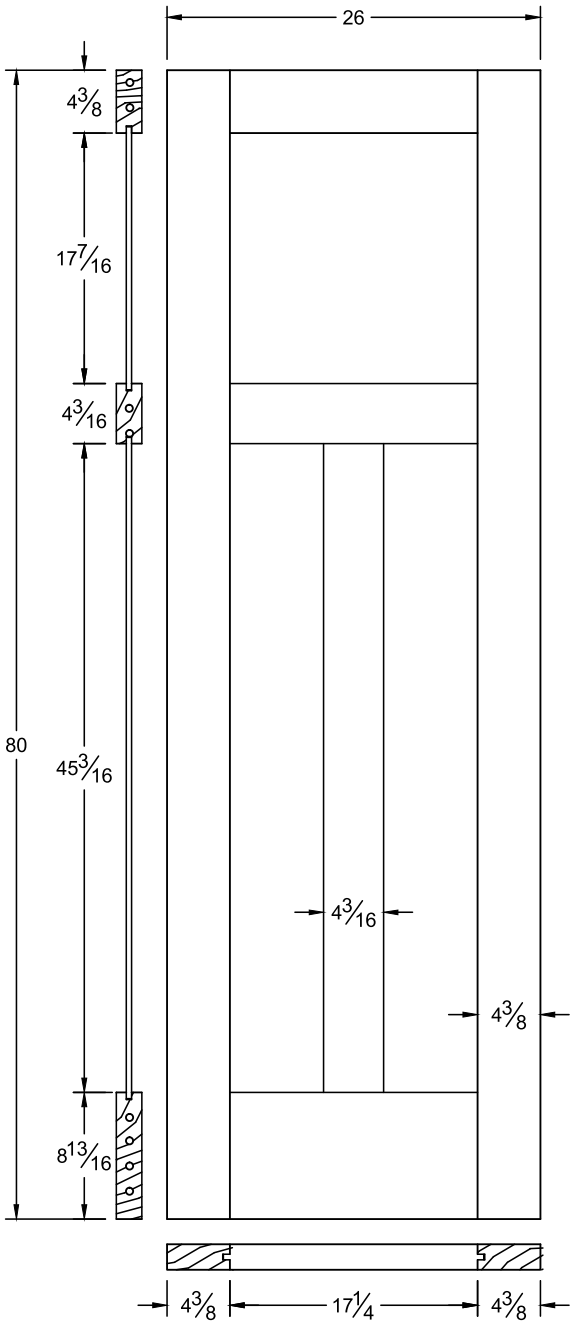

This drawing contains information which is the property of Woodgrain Millwork, Inc. This drawing is received on confinence and contents may not be disclosed without the prior written consent of Woodgrain Millwork, Inc.

4103T

Draw #:	Shaker 4103T_26_80	
Date:	10 - 16 - 14	R1
Drawn By:	T Doughty	

woodgrain doors